Arrow III. 11-channel HD Replay configuration

2U replay server with IPConnect option. Channels: 11 record (7 SDI + 4 NDI/RTCP); 11 search; 2 playback.
Graphics Port 1 (HDMI™) – Main Interface (MI). Graphics Port 2 (DP) – Multiviewer (MV). SDI Output 1 – Program.
Redundant Power Supply Option.

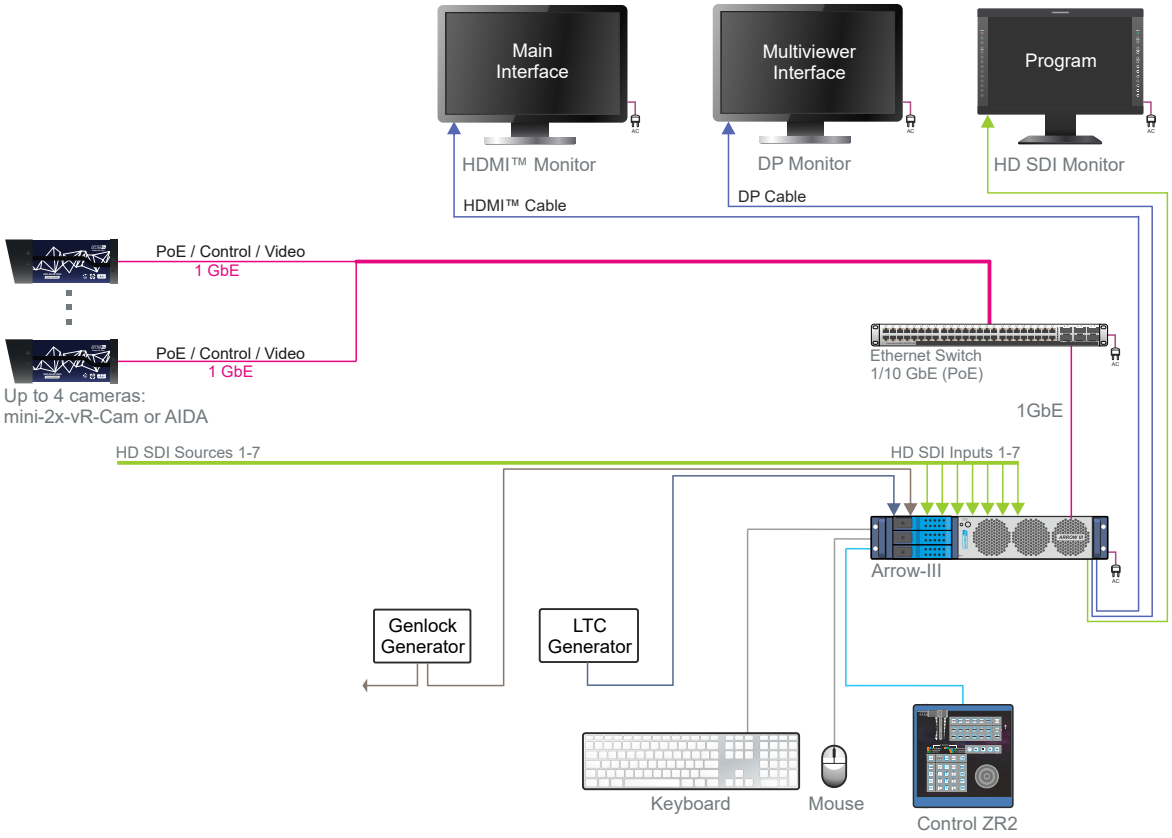

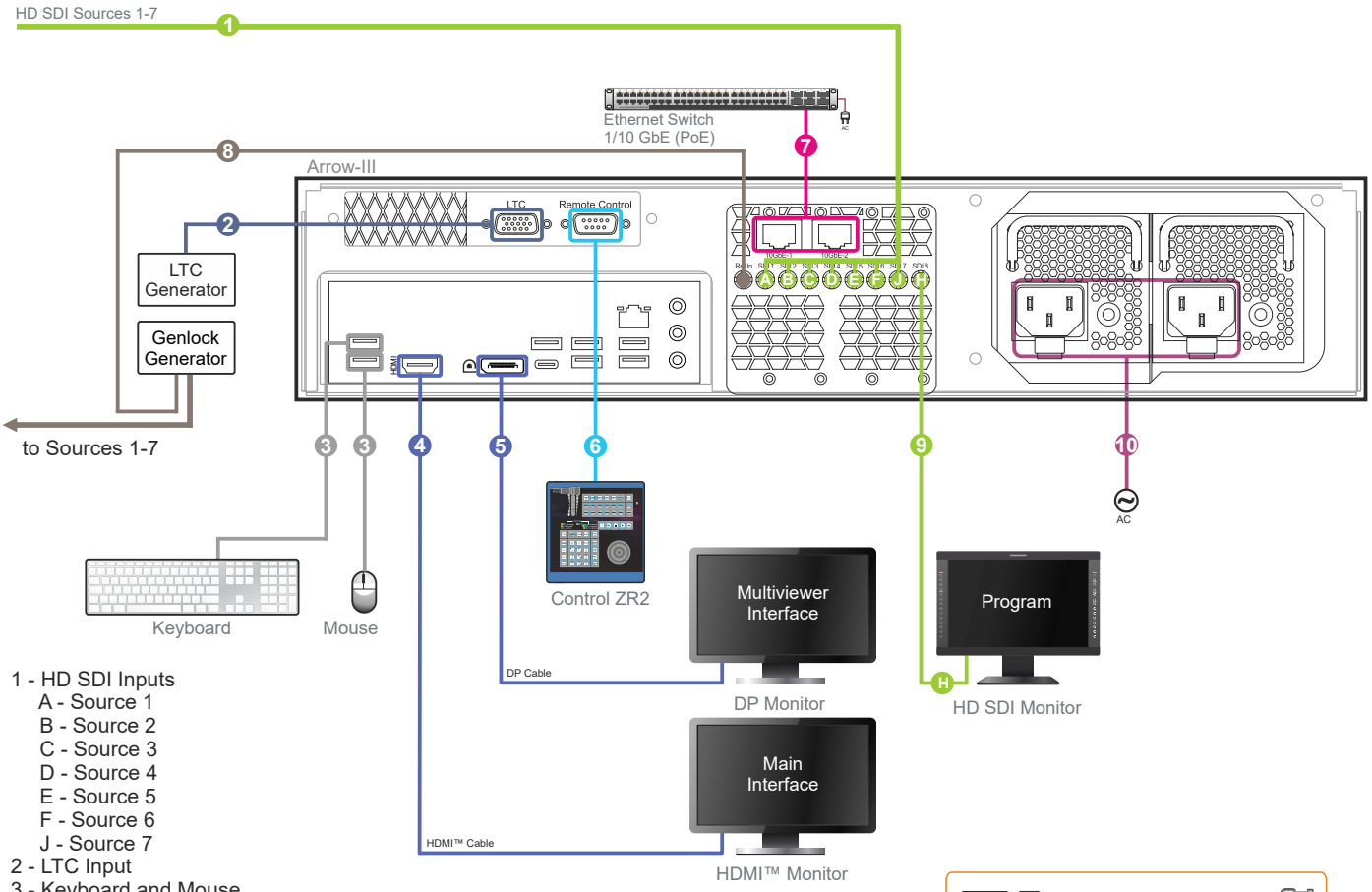

1 - HD SDI Inputs
- A - Source 1
- B - Source 2
- C - Source 3
- D - Source 4
- E - Source 5
- F - Source 6
- J - Source 7

2 - LTC Input
3 - Keyboard and Mouse
4 - HDMI™ 1920 × 1080 – Main Interface
5 - DP 1920 × 1080 – Multiviewer Interface
6 - Control ZR2
7 - 10 GbE
8 - Reference Input
9 - HD SDI Output H – Program
10 - AC110/220 V 60/50Hz

Use Slomo 900.003.043.10 Cable for BNC Connections 1, 8, 9

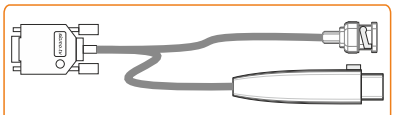

Use Slomo 900.020.040.01 Cable for LTC Input Connection